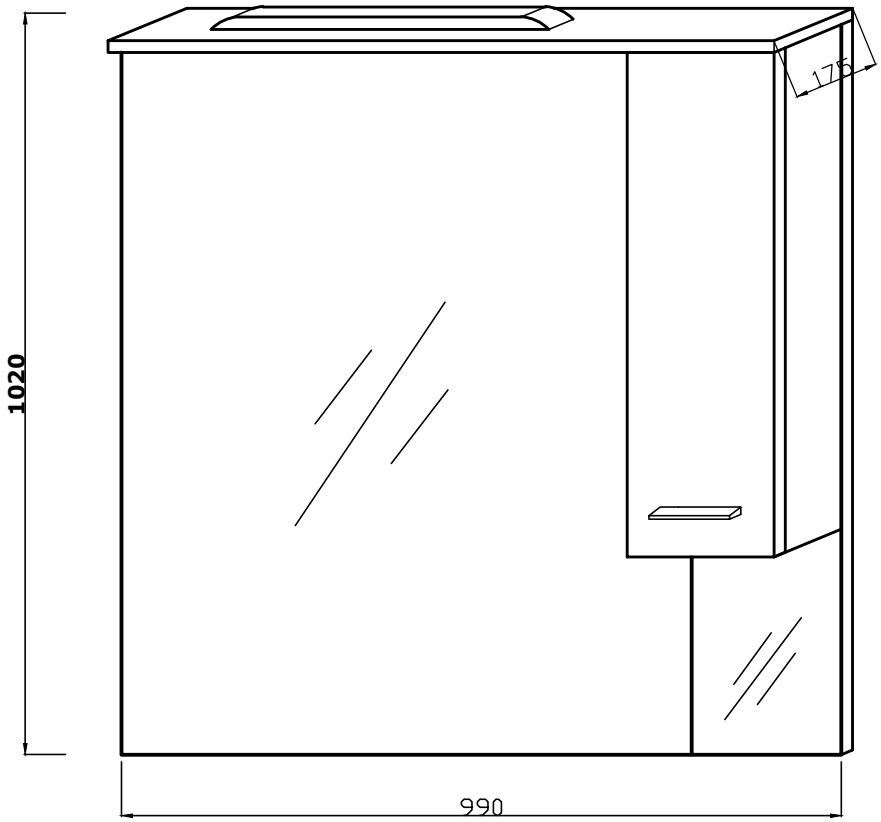

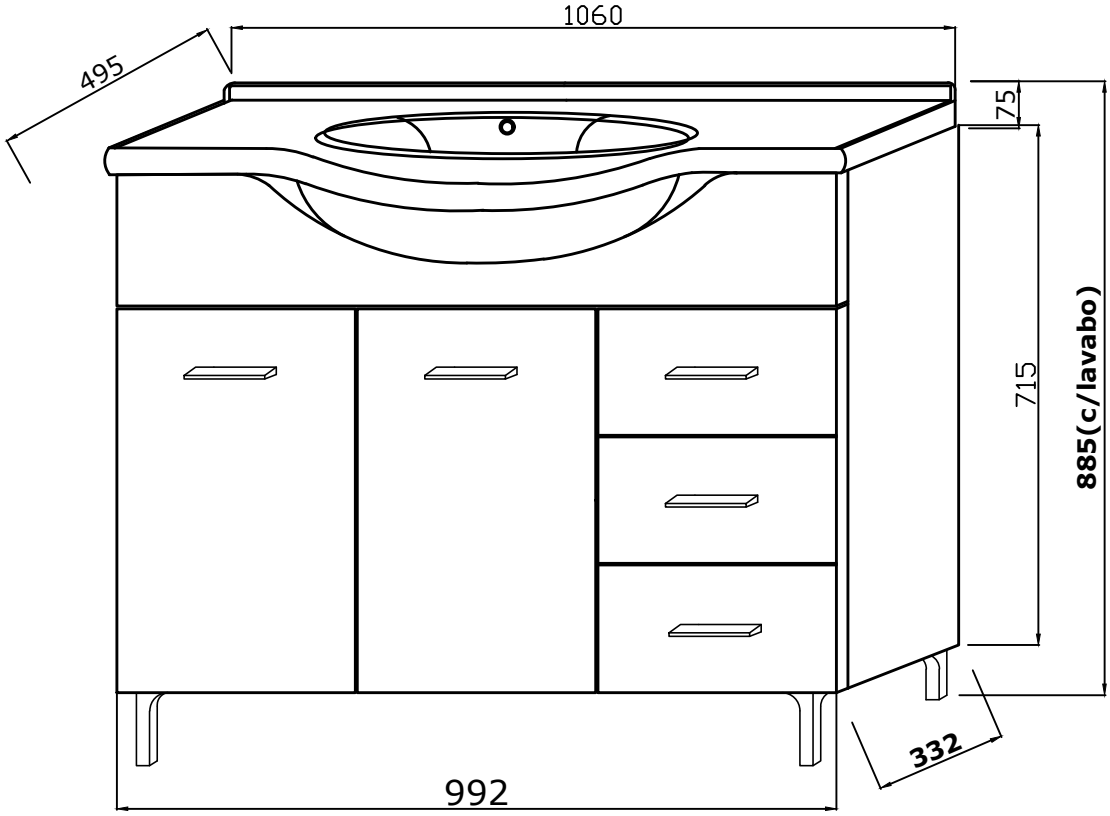

ART.836+812LED